Product Description:Pole Hedge Trimmer
Model Number:HTX 5300-P
Service Item Number:F830037002S01
Version:A
Issue Date: 2025/7/14

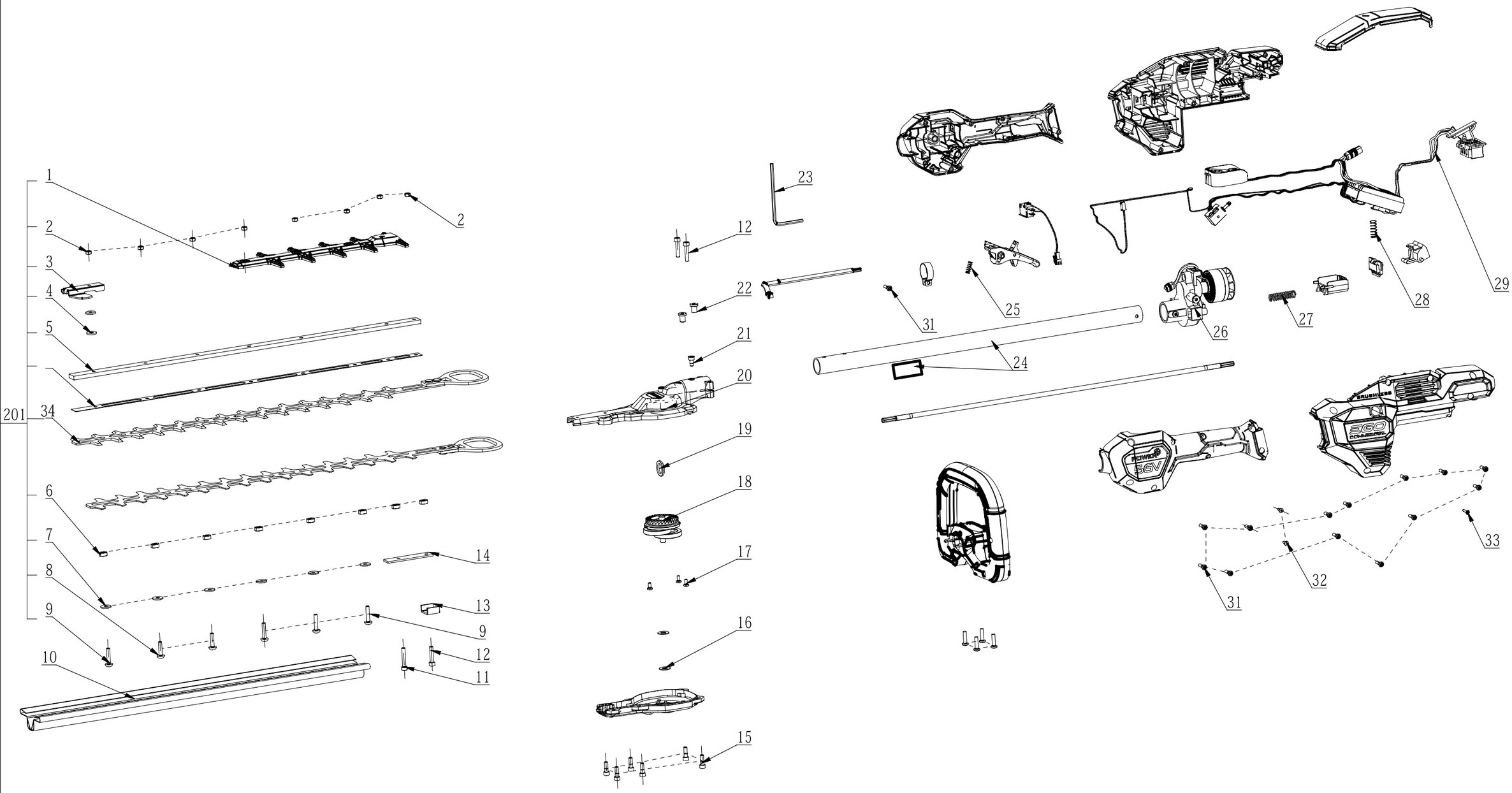

Service Part List_HTX5300-P_Vervion A

No.	Product Model#	Part Number	Description	Qty
1	HTX5300-P	3403481001	Protective Teeth	1
2	HTX5300-P	5630007010	Prevailing Torque Hexagon Nut	8
3	HTX5300-P	3705992001	Tip Protector	1
4	HTX5300-P	5650047001	Plain Washer	2
5	HTX5300-P	3709011001	Clamp Support	1
6	HTX5300-P	3580331001	Bushing	8
7	HTX5300-P	5650487001	Plain Washer	6
8	HTX5300-P	5620605001	Hexagon Socket Screw	2
9	HTX5300-P	5611133001	Hexagon Socket Button Head Scre	4
10	HTX5300-P	3134546001	Sheath	1
11	HTX5300-P	5620646002	Hexagon Socket Screw	1
12	HTX5300-P	5620216005	Hexagon Socket Screw	3
13	HTX5300-P	3709251001	Support Plate	1
14	HTX5300-P	3709014001	Support Plate	1
15	HTX5300-P	5620019005	Hexagon Socket Screw	6
16	HTX5300-P	5650569001	Plain Washer	1
17	HTX5300-P	5620156007	Hexagon Socket Screw	3
18	HTX5300-P	2850175001	Bevel Gear Assembly	1
19	HTX5300-P	5651100001	Plain Washer	1
20	HTX5300-P	2790815001	Gear Case Assembly	1
21	HTX5300-P	5620213003	Hexagon Socket Screw	1
22	HTX5300-P	5620606001	Hexagon Socket Screw	2
23	HTX5300-P	5680164001	Inner Hexagon Spanner	1
24	HTX5300-P	2850171002	Connecting Tube Assembly	1
25	HTX5300-P	3660088003	Knob-reset Spring	1
26	HTX5300-P	2790798001	Motor And Gear Case Assembly	1
27	HTX5300-P	3660818001	Compression Spring	1
28	HTX5300-P	3660013003	Spring1	1
29	HTX5300-P	2831686001	Electric Assembly	1
31	HTX5300-P	5620479001	Screw	22
32	HTX5300-P	5610295001	Hexagon Socket Screw	2

Service Part List_HTX5300-P_Vervion A

No.	Product Model#	Part Number	Description	Qty
33	HTX5300-P	5610241001	Screw	1
34	HTX5300-P	2829661001	Blade	2
201	HTX5300-P	2850156001	Blade Set	1